LEGAL DESCRIPTION:
ALL THAT PART OF THE SW 1/4 OF SECTION 21, T-1-S, R-14-W, AND THAT PART OF THE NE 1/4 OF THE NW 1/4 OF SECTION 28, T-1-S, R-14-W, CITY OF BRYANT, SALINE COUNTY, ARKANSAS, MORE PARTICULARLY DESCRIBED AS FOLLOWS; COMMENCING AT AN OLD AXLE ACCEPTED AS THE NE CORNER OF SAID NE1/4 NW1/4, SECTION 28; THENCE N 89°08'30" W 170.91 FEET TO THE CENTERLINE OF CREEK AND THE POINT OF BEGINNING; THENCE S 03°37'43" W 69.37 FEET; THENCE S 34°40'16" W 186.19 FEET; THENCE S 11°43'37" W 142.22 FEET; THENCE S 31°43'10" W 165.85 FEET; THENCE S 20°24'30" E 196.00 FEET; THENCE S 35°38'26" E 59.94 FEET; THENCE S 20°55'33" E 36.84 FEET; THENCE S 32°15'15" W 23.21 FEET; THENCE S 20°22'28" E 5.53 FEET; THENCE S 73°11'20" E 43.79 FEET; THENCE N 81°16'19" E 68.04 FEET; THENCE S 55°55'19" E 27.08 FEET; THENCE S 20°44'00" E 55.24 FEET; THENCE S 02°44'59" E 106.60 FEET; THENCE S 33°48'35" W 65.84 FEET; THENCE S 01°54'56" W 116.73 FEET; THENCE S 46°02'48" E 59.08 FEET; THENCE S 13°44'56" E 81.53 FEET; THENCE S 01°41'58" W 34.52 FEET; THENCE S 89°27'03" W 1232.39 FEET; THENCE N 00°23'20" E 98.50 FEET; THENCE N 89°26'47" E 587.85 FEET; THENCE N 20°28'57" W 420.96 FEET; THENCE N 81°24'09" E 492.19 FEET; THENCE N 21°11'12" W 595.10 FEET TO THE SOUTH RIGHT OF WAY LINE OF INTERSTATE 30; THENCE N 65°07'38" E 513.20 FEET ALONG SAID RIGHT OF WAY LINE OF INTERSTATE 30; THENCE DEPARTING SAID RIGHT OF WAY S 03°37'43" W 35.04 FEET TO THE POINT OF BEGINNING, CONTAINING 568,110 SQUARE FEET, 13.04 ACRES.

SURVEY BASED ON HOPE ENGINEERS, INC. DATED: FEBRUARY 6, 1998

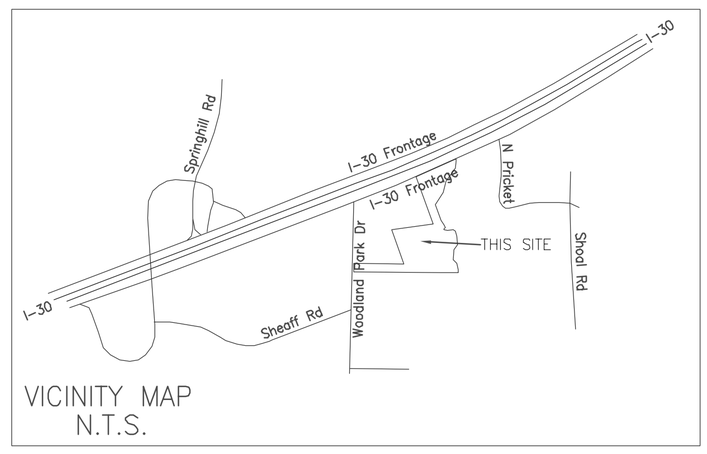

VICINITY MAP
N.T.S.

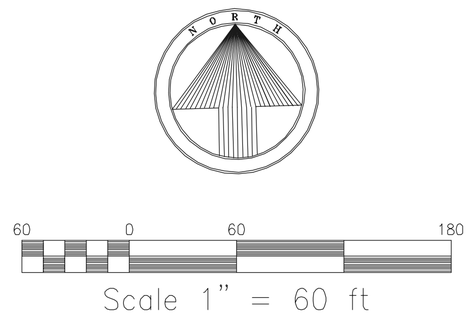

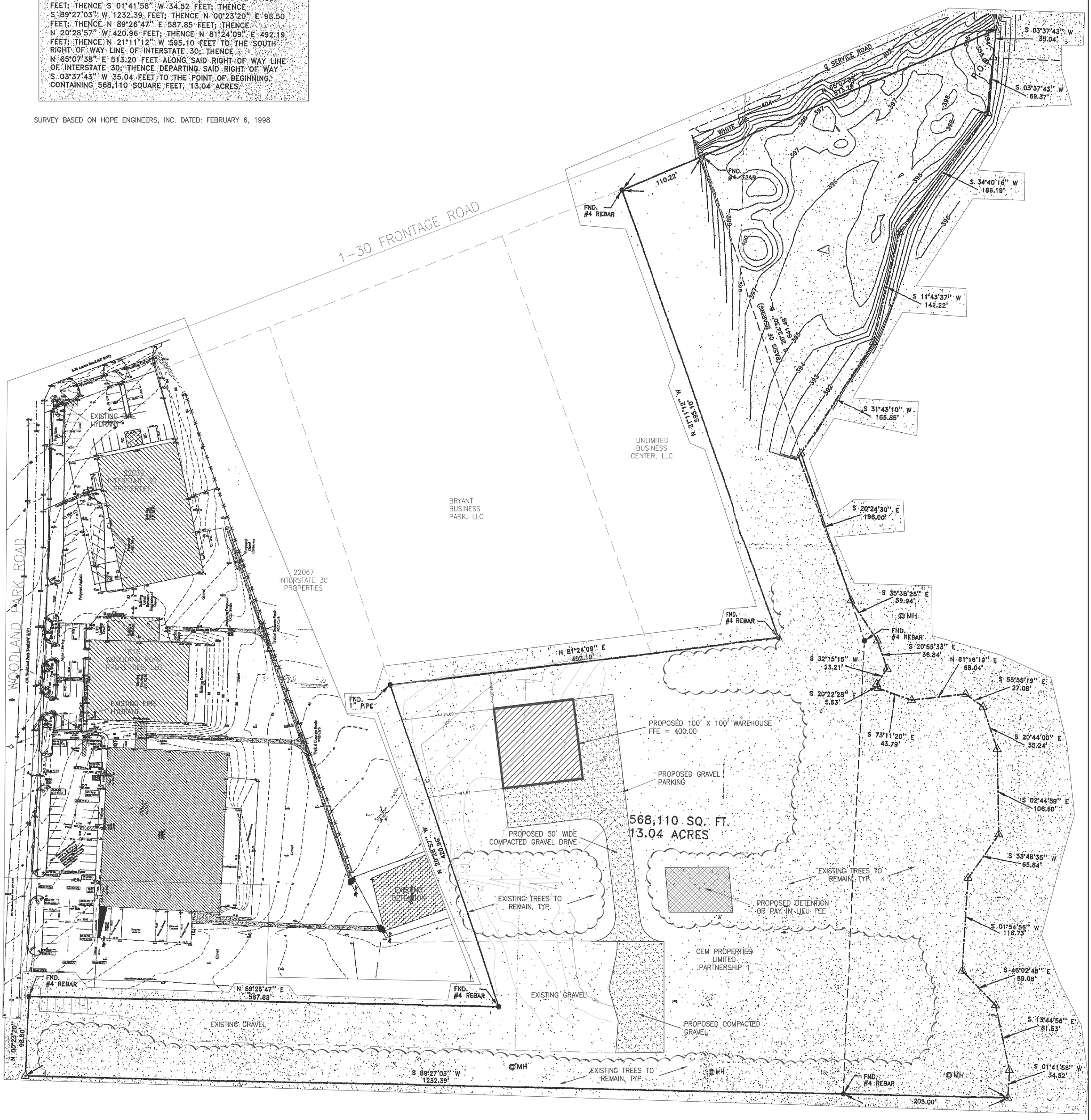

GENERAL INFORMATION
1. ZONING: C-2
2. OWNER OF RECORD:
   MIDDLETON HEAT & AIR
   22039 I-30
   BRYANT, AR 72022
   CONTACT: TRUETT SMITH
   (501) 943-0301
3. LOT AREA = 566,191 SF

NO PORTION OF THIS PROPERTY IS LOCATED WITHIN THE 100 YEAR FLOOD BOUNDARY AS SHOWN ON THE FLOODWAY, FLOOD BOUNDARY AND FLOOD INSURANCE WORK MAP FOR SALINE COUNTY, ARKANSAS. THIS PROPERTY LIES IN ZONE "X".(FIRM COMMUNITY PANEL # 05125C0400D, JUNE 19, 2012)

WHITE-DATERS & ASSOCIATES, INC.
CIVIL ENGINEERING, LAND PLANNING & DEVELOPMENT, SURVEYING
24 RAHLING CIRCLE LITTLE ROCK, ARKANSAS 72223

Survey By:	Drawn By:	Checked By:	

SITE PLAN

MIDDLETON HEAT & AIR
WOODLAND PARK DRIVE

BRYANT, ARKANSAS

Revised	
Date	03-20-19
Scale	Hor. 1"=60'
Sheet	of
Job No.	

I-30
I-30 Overpass
21941 I-30 SOUTH
PLAZA WEST LLC
840-14895-000
6.23
840-14885-000
1.23
22039 I-30 SOUTH
22067 INTERSTATE 30 PROPERTIES
22067 I-30 SOUTH
840-14885-001
2.07
BRYANT BUSINESS PARK LLC
840-14883-000
4.24
22095 I-30 SOUTH
UNLIMITED BUSINESS CENTER LLC
840-14881-004
1.61
I-30 SOUTH 840-14881-005
1.90
MAYES LAURA 840-14881-001
1.63
1617 PRICKETT RD
PRICKETT JOEL C 840-14866-004
1.63
ARKANSAS STORAGE CENTERS LLC
840-14865-000
3.32
1626 PRICKETT RD
840-14861-000
1.48
Prickett Rd
840-14862-000
0.25
840-14866-000
1.23
1607 PRICKETT RD
1601 PRICKETT RD
840-14864-002
0.99
PRICKETT SALLY POWELL
1609 PRICKETT RD
840-14866-001
1.50
1816 WOODLAND PARK RD
840-14886-000
1.16
CEM PROPERTIES LIMITED PARTNERSHIP I
840-14881-000
13.04
I-30 SOUTH
1800 WOODLAND PARK RD
840-14886-001
3.49
CEM PROPERTIES LIMITED PARTNERSHIP I
840-14866-003
3.23
PRICKETT RD
840-14864-000
3.26
1501 PRICKETT RD
840-14866-002
1.50
PRICKETT DIANNA CAROLE
Woodland Park Rd
1623& 1613 WOODLAND PARK RD
840-14903-000
9.18
1608 WOODLAND PARK RD
CEM PROPERTIES LIMITED PARTNERSHIP I
840-14911-000
2.51
Sheaff Ave
840-14904-000
3.12
STEWART/LEDGERWOOD REVOCABLE LIVING TRUST
1409 SHOAL RD
840-14870-000
41.60
840-14905-000
2.00
840-14912-000
1.00
PORTER JUDY A
WOODLAND PARK RD
840-14913-000
2.52
20895
20920
20925
20930
20935
20915
20890
20885
20880
20910
20875
20780
20775
20770
20765
20760

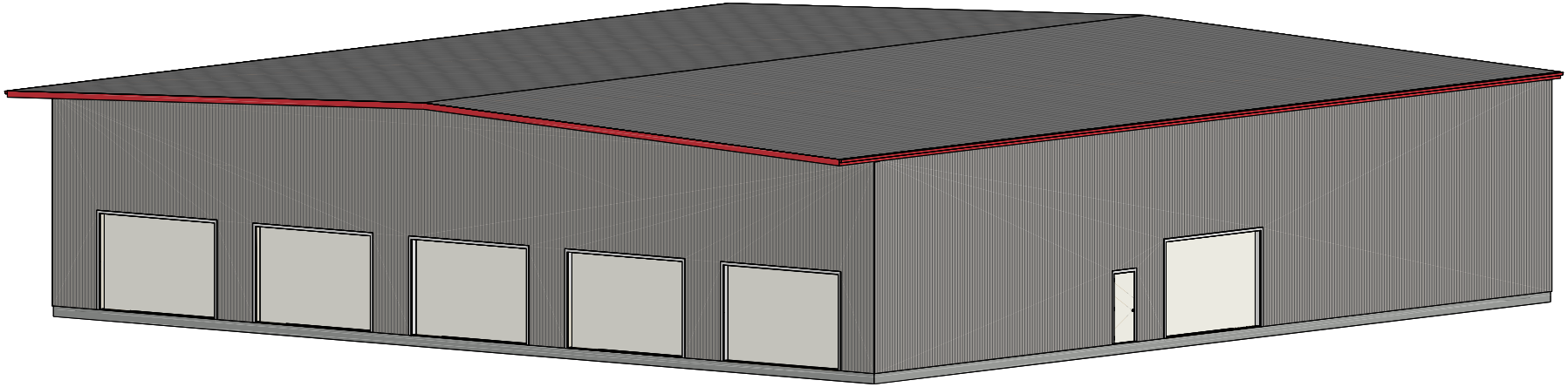

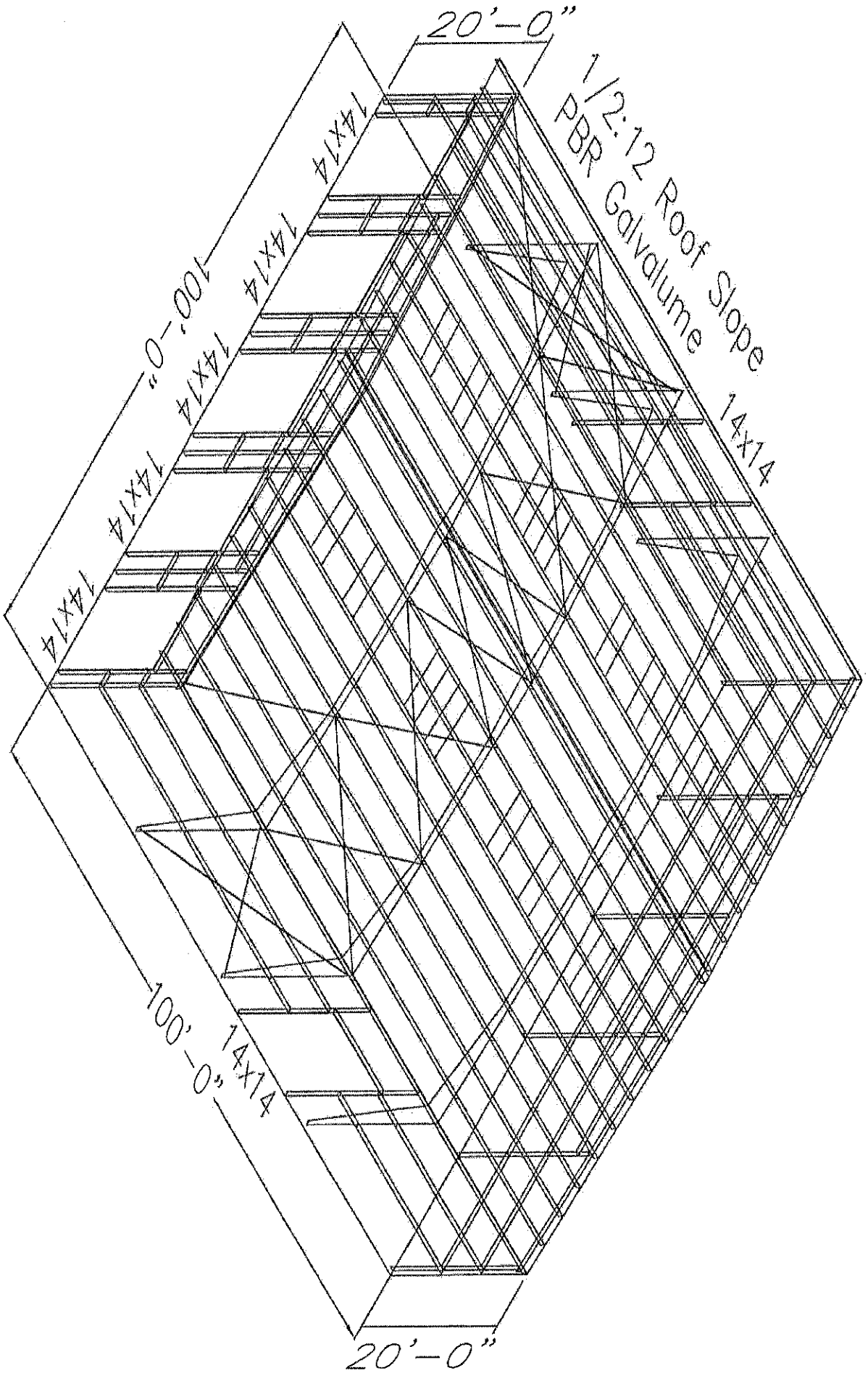
20'-0"
1/2:12 Roof Slope
PBR Galvalume
14x14
14x14
14x14
14x14
14x14
14x14
100'-0"
100'-0"
14x14
20'-0"

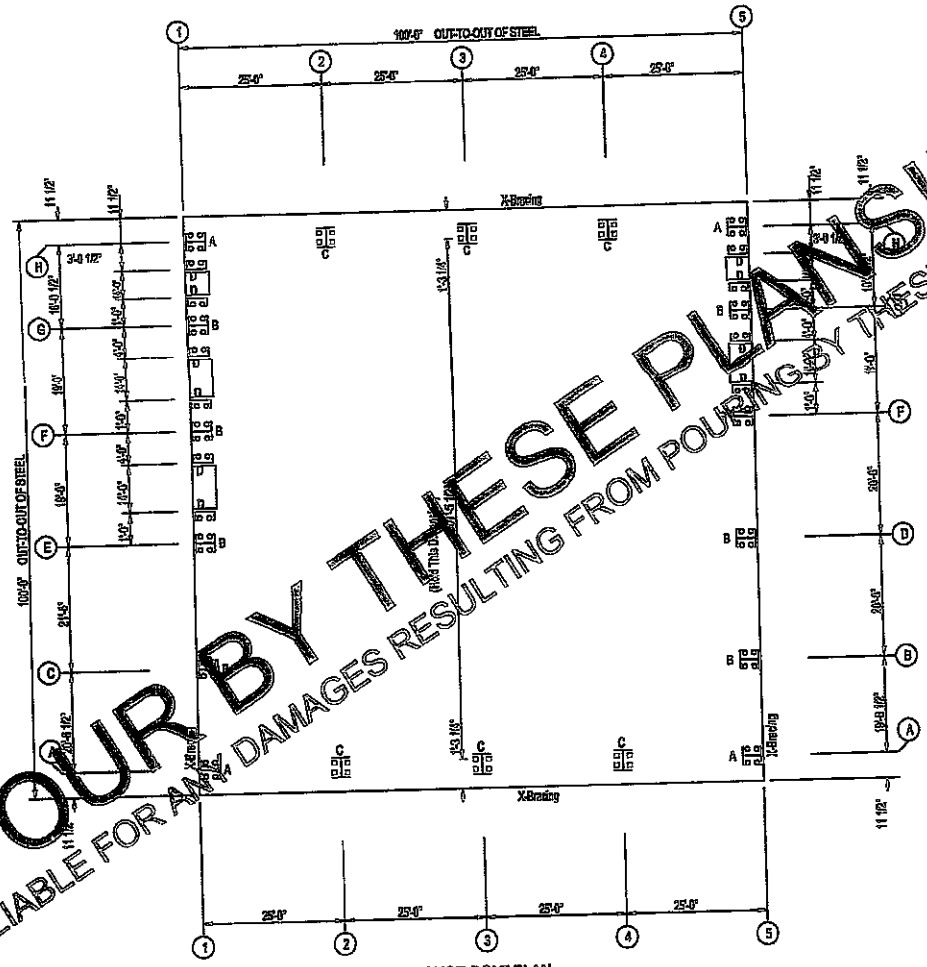

ANCHOR BOLT PLAN

NOTE: ALL BASE PLATES @ 100.0' (U.N.)
ASSUMED FINISH FLOOR @ 100.0' (U.N.)

ISSUE	DATE	DESCRIPTION	BY	CKD	DSN
0	1/16/19	FOR QUOTE			

[redacted]

PROJECT: Jo2/Mich
CUSTOMER: Acme, AR
ORDER:
LOCATION: Bacon, AR, 72022

CAD	DATE	SCALE	PHASE	BORDER/STD	JOB NUMBER	SHEET NUMBER	ISSUE
	1/16/19	N.T.S.	1	A	2340611	F1	0

DO NOT POUR BY THESE PLANS!!!
HERITAGE WILL NOT BE LIABLE FOR ANY DAMAGES RESULTING FROM POURING BY THESE PLANS.